ATG
LED LIGHTING

PTV2

G2

CLIO G2

Duo Selectable LED Post Top/Area Light

PTV2

Duo Selectable LED Post Top/Area Light

DESCRIPTION

LED Post Top Fixture/ 120-277V Input(347-480V Optional)/
Power & CCT Selectable/ 0-10V Dimming

PRODUCT FEATURES

- Modern form design, ideal for architectural outdoor application
- Constructed from durable, corrosion-resistant, cast aluminum
- Silicone gasketing is provided for complete weather and insect protection
- Solite diffuser provide soft glow and visual comfort with zero uplight
- Available with Bi-level motion sensor, 3-pin and 7-pin NEMA photocell
- High-performance optics feature Type III & Type V distributions
- Surge Protection: L/N-PE 10KV,L-N 6KV (20KV Optional)
- Features Wattage Select Technology: Adjust power between 4 selections
- Operating Temp: -40°F~122°F
- Feature CCT Select Technology: Adjust CCT between 3000K/4000K/5000K
- PF>0.95, THD<20%
- Available in standard and custom colors
- Rated for IP65， ETL Wet Location Listed, IK09
- DLC Premium Listed, DLC LUNA and Dark Sky Listed for 3000K model
- Industry leading 10 year warranty, L70>100,000 hrs

PRODUCT SPECIFICATIONS

Part Number	Input	CCT	CRI	3000K			4000K			5000K		
				Nominal Wattage(W)	Efficacy (LM/W)	Light Output(LM)	Nominal Wattage(W)	Efficacy (LM/W)	Light Output(LM)	Nominal Wattage(W)	Efficacy (LM/W)	Light Output(LM)
Wattage & CCT Selectable												
PTV2-100P-T1-T3	120-277V (347-480V Optional)	3K/4K/5K Select	>70	102	159.3	16,204	99	173.6	17,114	102	165.7	16,885
				80	162.4	12,995	80	177.1	14,169	80	169.0	13,521
				60	165.6	9,937	60	180.6	10,835	60	172.3	10,340
PTV2-100P-T1-T5				102	163.4	16,622	99	181.0	17,856	103	172.1	17,641
				80	166.7	13,336	80	184.7	14,773	80	175.5	14,043
				60	170.0	10,198	60	188.3	11,297	60	179.0	10,739
PTV2-100P-T1-T3 @130W	120-277V (347-480V Optional)	3K/4K/5K Select	>70	130	156.1	20,297	130	170.2	22,131	130	162.5	21,119
PTV2-100P-T1-T5 @130W				130	160.2	20,829	130	173.6	22,573	130	168.7	21,934
Wattage Selectable												
PTV2-100P-XX-T3 set at 130W	120-277V (347-480V Optional)	3K/4K/5K Fixed	>70	100	158.7	15,916	100	161.8	16,183	100	165.0	16,500
				80	161.8	12,946	80	165.1	13,205	80	168.3	13,464
				60	165.0	9,900	60	168.3	10,098	60	171.6	10,296
PTV2-100P-XX-T5 set at 130W				100	163.2	16,357	100	166.5	16,649	100	169.8	16,975
				80	166.5	13,319	80	169.8	13,585	80	173.1	13,852
				60	173.1	10,389	60	176.6	10,597	60	180.1	10,804
PTV2-100P-XX-T3 @130W	120-277V (347-480V Optional)	3K/4K/5K Fixed	>70	130	155.5	20,221	130	158.6	20,617	130	161.8	20,977
PTV2-100P-XX-T3 @130W				130	160.0	20,803	130	163.2	21,211	130	166.4	21,635

* Data for 100W are based on LM79. Data for 80W and 60W are extrapolated with multiplier of 1.02 and 1.04.
* Clio G2 can be adjusted to 130W for higher performance.
* DLC LUNA and Dark Sky are only for 3000K models.

©2022 ATG LED Lighting
10588 Monte Vista Avenue
Montclair, CA 91763
www.atgledlighting.com
T: 951.245.6222
E: sales@atgledlighting.com

PTV2
Duo Selectable LED Post Top/Area Light

LIGHT DISTRIBUTION PATTERN

PTV2-100P-30-T3 @100W, 3000K with shield

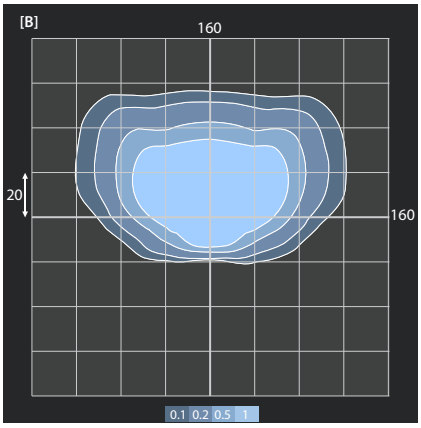

Manufacturer	ATG LED LIGHTING	Configuration	Single
Lamp Lumens	10407	Orientation	Single
Lamp Quantity	1	Mounting Height	20
Light Loss Factor	1	Arm Length	1
Input P ower	100.3	Tilt	0
Max Illuminance	10	Area > 0.5fc	4032

PTV2-100P-T1-T3 @100W, 3000K

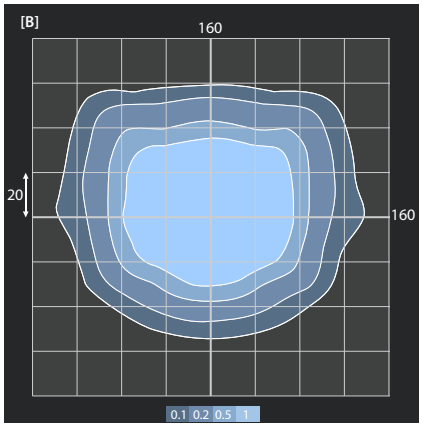

Manufacturer	ATG LED LIGHTING	Configuration	Single
Lamp Lumens	16114	Orientation	Single
Lamp Quantity	1	Mounting Height	20
Light Loss Factor	1	Arm Length	1
Input P ower	101.7	Tilt	0
Max Illuminance	10	Area > 0.5fc	5648

PTV2-100P-T1-T5 @100W, 3000K

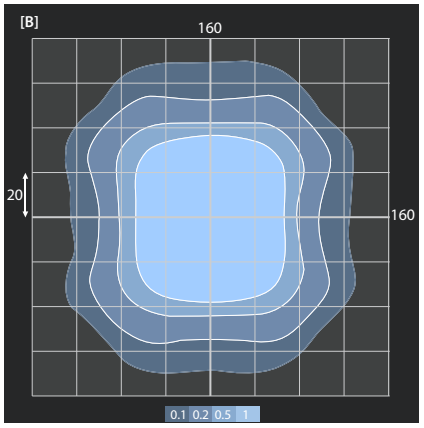

Manufacturer	ATG LED LIGHTING	Configuration	Single
Lamp Lumens	16586	Orientation	Single
Lamp Quantity	1	Mounting Height	20
Light Loss Factor	1	Arm Length	1
Input Power	101.7	Tilt	0
Max Illuminance	6	Area > 0.5fc	6432

These lighting calculation results are for general informational purposes only and are provided without warranty as to accuracy, completeness, reliability or otherwise.
Results are based on user provided data and data provided from publicly available sources; actual field conditions may affect calculated output.

PHYSICAL SPECIFICATIONS

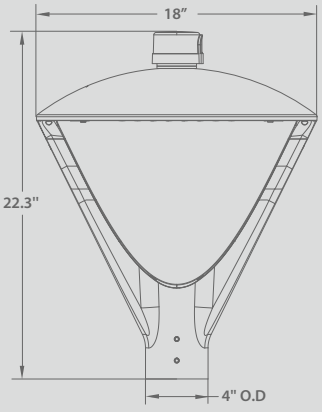

Fit 3" round pole

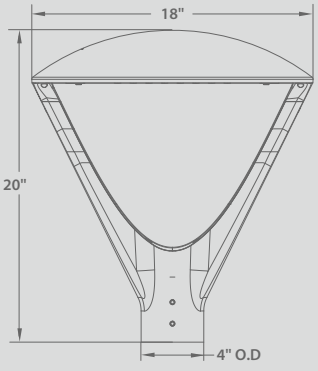

Fit 3" round pole

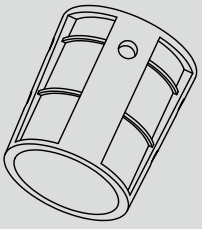

Tenon reducer(TR-3TO2.4)
is available to fit 2-3/8" tenon mount, sold separately. Extra tenon adapter is needed for 4" and 5" pole without tenon.

Model	EPA	Fixture Dimension		Packing	Weight	
		Without Bracket	With Bracket		Net	Gross
PTV2-100P-T1-T3	0.5 ft^2	Φ458mm(18") * 508mm(20")	Φ 458mm(18") * 567mm(22.3")	460mm(18") * 548mm(21.6")	8KG(17.6LBS)	8.5KG(18.7LBS)

©2022 ATG LED Lighting
10588 Monte Vista Avenue
Montclair, CA 91763

www.atgledlighting.com
T: 951.245.6222
E: sales@atgledlighting.com

Data subject to change. Last Edited: May 21, 2026 10: 00 PM

PTV2
Duo Selectable LED Post Top/Area Light

ADDITIONAL ACCESSORIES (SOLD SEPARATELY)

ATG CODE	MODEL NUMBER	DESCRIPTION
P1	JL-207C	3-pin Photocell, 120-277VAC, including base
P2	JL-207F	3-pin Photocell, 480VAC, including base
P3	JL-243C	7-pin Photocell, 120-277VAC, including base
SH	ANT-9	Microwave Motion Sensor, 12VDC
R1	RC-100	Remote for ANT-9
TR	TR-3TO2.4	Tenon reducer,3 inch to 2-3/8 inch
SC	OJ-M715-C	Shorting cap for 3-pin photocell (included in packing)
SHD	SHD-PTV2-01	Backlight shield for Clio G2

JL-207C

JL-243

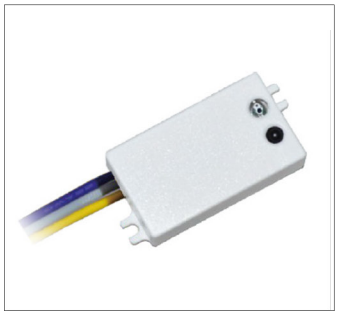

ANT-9

RC-100

TR-PTV2-01

OJ-M715-C

SHD

ORDER FORMAT

Series	Wattage	CCT	Input	Optics	Mounting	Finish	Options
PTV2							
PTV2	100P= Power Selectable 130W/100W/80W/60W	T1= 3000K/4000K/ 5000K Select	Blank= 120-277VAC	T3	Blank= Double Arm	Blank= Bronze	P1= JL-207C
			V= 347-480VAC	T5		W= White	P2= JL-207F
						B= Black	P4= JL-243C

©2022 ATG LED Lighting
10588 Monte Vista Avenue
Montclair, CA 91763

www.atgledlighting.com
T: 951.245.6222
E: sales@atgledlighting.com

Data subject to change. Last Edited: May 21, 2026 10: 00 PM