PSC-ZKV-I-1X0-xxx | Wireless PIR Motion Sensor with Connector

Overview

- PIR sensor
- 0-10V Dimming output
- Photocell for daylight sensing
- Low Voltage Connector
- Active High output for Relay drive
- Mounting height up to 40 ft.
- 360° coverage pattern
- Bluetooth SIG Mesh
- Mate with any Zhaga Book 18 Receptacle, see TE#234340

*Receptacle not included

Applications

The PSC-ZKV-I-1X0-xxx uses PIR motion detection architecture and passive infrared (PIR) technology for improved detection coverage.

The sensor is suitable for a variety of indoor and outdoor applications. It comes with Low Voltage Connector for mounting up to 40ft high. Sensor is IP 65 rated for use in temperatures ranging from -30° to 70°C.

This device can be powered by 12V auxiliary power from dim-to-off LED driver for east set-up and operation.

Wireless Control Operation

End users can program dimming levels and group multiple controls into a Bluetooth Mesh system for simultaneous wireless lighting control.

1 Channel Dimming: allows for one 0-10V dimming channel for driver control. The controller allows for Bluetooth Mesh system pairing with Bluetooth Mesh system providers.

Relay Control: High control output can be used to trigger relays or other control circuitry.

How to Order

Model No.	Description	Input Voltage	Output
PSC-ZKV-I-100	PIR Sensor w/ 0-10V Dimming and Relay Drive Output Low Voltage Connector	12-24VDC	Control High 0-10V Dimming
PSC-ZKV-I-110	PIR Sensor w/ 0-10V Dimming, Relay Drive Output, and light Sensing Low Voltage Connector	12-24VDC	Control High 0-10V Dimming
Add Suffix for options:			
-BLE-SR	For Bluetooth Mesh in TruBlu™ Enabled Version		

Summary	
Product Type	Wireless PIR
Input	12-24 VDC
0-10V Dimming	100mA
Relay Control	Vin-2.5 V 100mA source
Max Detection Area	12m mounting / 24m Diameter
Photocell	Enabled
Operating Temperature	-40° C to 70°C
Storage Temperature	-40° C to 85°C
Mounting	Low Voltage Receptacle
Color	Black

Physical Dimensions

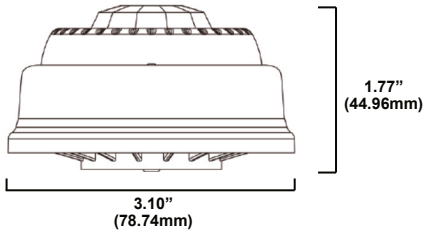

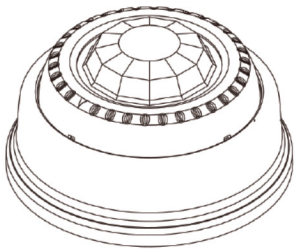

Wireless Diagram:

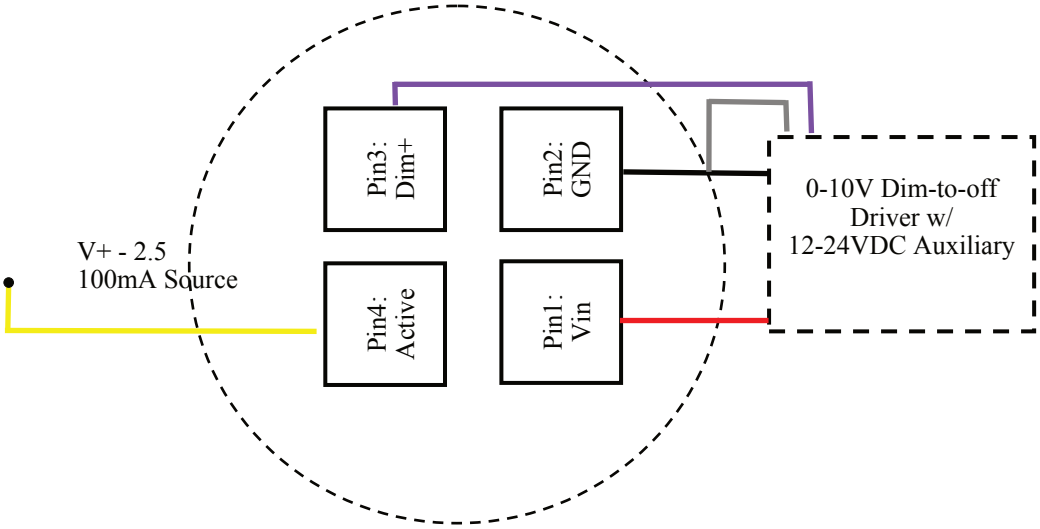
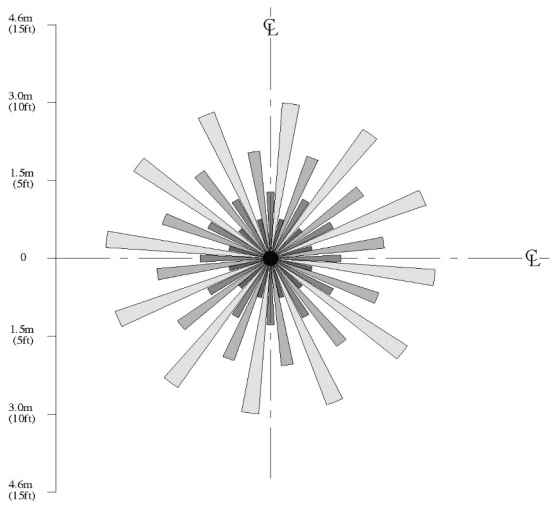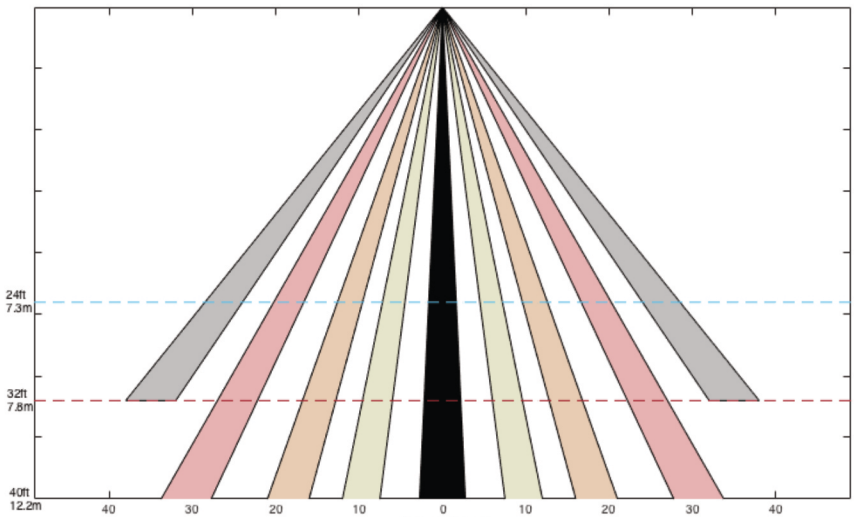
Detection Area for 40ft Mounting Height