ATG LED LIGHTING

RF433Mhz 0-10V Wireless Lighting Control System

Wireless Wall-mount PIR Sensor

Power Pack 0-10V Dimming Module

Daylight Sensor

Wireless Dimmer

Wireless Dual-tech PIR/Daylight Sensor IP66

You can save up to 60% of lighting electricity usage with this wireless smart control system.

THIS SYSTEM INCLUDE:

1. Power Pack 0-10V dimming module: which control load according to radio frequency (RF) command sending from sensor or dimmer.
2. Wireless PIR occupancy / vacancy sensor: which detect people movement to see if the space is occupied, then send wireless command to dimming module to control the light on/off/dim automatically.
3. Wireless daylight harvest sensor: which measure light in the space, then wirelessly transmits the light level to the associated dimming module that automatically control the lights to balance light level in the space.
4. Wireless Dimmer: which can be used to manually turn on/off and dim lights .

NOTE:

> You will need to have one 0-10V dimming module + at least one wireless transmitter PIR sensor / daylight sensor / dimmer + 0-10V LED driver to control the system .

> All wireless transmitters are battery powered , sending RF command to control all dimming modules in the RF range up to 30 m .

> One dimming module can be controlled by 5 remote control dimmers, 4 PIR sensors , 1 daylight sensor at most .

10588 Monte Vista Ave,
Montclair, CA 91763

atgelectronics.com
sales@atgelectronics.com
951.245.6222

ATG LED LIGHTING

Power Pack 0-10V Dimming Module

Mounts through standard knockout on electrical box without moving any previous wire .

Model Number	Voltage	Standby Power	Max. Current	Max. Power	Frequency Band	RF Range	Environment
PPA401S	120V/277V 50~60Hz	0.6W	10A	1200W	443.92Mhz	30m	Indoor use

Dimension

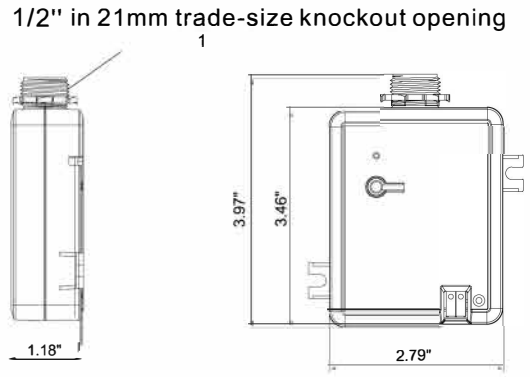

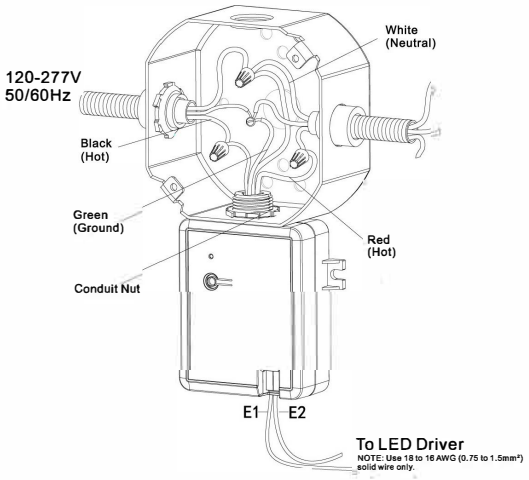

Wiring Schematic

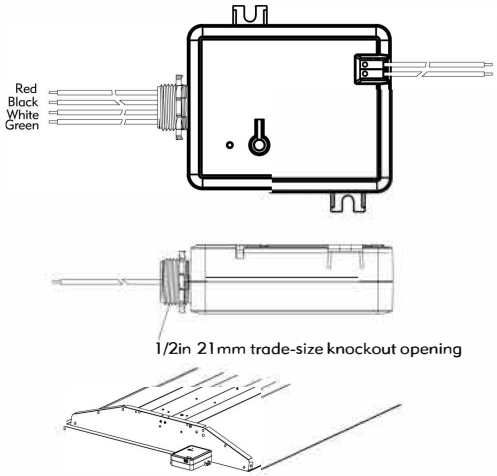

Housing mounts into standard ½" knockout on lighting fixture or junction box.
Wire feed through knockout for connection inside lighting fixture or junction box.

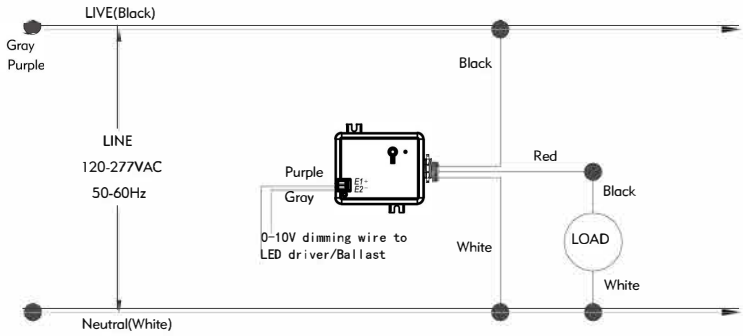

10588 Monte Vista Ave,
Montclair, CA 91763

atgelectronics.com
sales@atgelectronics.com
951.245.6222

Wireless Dimmer

Manually turn on/off and dim lights anywhere in the space

Easy configuration for use as a handheld control or wall-mount control

Model Number	Voltage	Standby Current	Battery Life	Frequency Band	RF Range
WP401	3V	<1uA	10-year	443.92Mhz	30m

Dimension

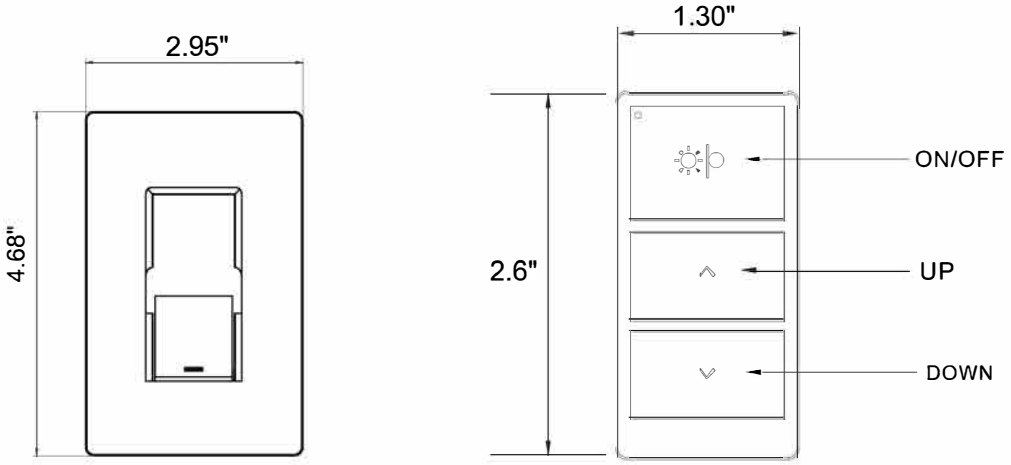

Quick Setup :

1. Push PAIR on power pack
2. Push ON/OFF button for 3s to PAIR with power pack
   You will hear a beep indicating the dimmer has linked with the power pack .
3. Try the buttons to see if light is successfully controlled

10588 Monte Vista Ave,
Montclair, CA 91763

atgelectronics.com
sales@atgelectronics.com
951.245.6222

Wireless PIR Occupancy / Vacancy Sensor

Mount sensor to have a best unobstructed view of the whole room , far away from hot object.

Setup easily on surface buttons.

Model Number	Voltage	Standby Current	Battery Life	Frequency Band	RF Range	Field-of-view	Detect Distance
BMS401	3V	2.5uA	5-year	443.92Mhz	30m	120°	4m-15m

Dimension

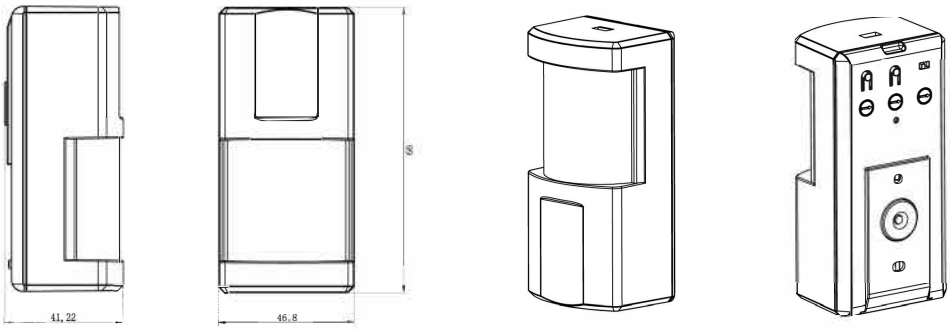

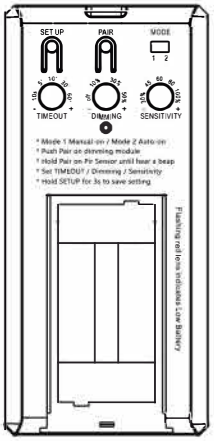

Quick Setup:

Chose Mode 1 Occupancy mode : light need to be manually switched on with manual controller , delay time 30min , automatically off if no people detected in 30min . This mode is usually for meeting room .
Mode 2 Auto-on : Light automatically on once detect people , automatically off or go down to dimming level after people leave .

1. Push PAIR o n Power Pack 0-10V dimming module , the small led on dimming module will flash quickly .
2. Push PAIR on PIR sensor for 3s.
   You will hear a beep indicate the sensor has linked with the dimming module.
3. Set Timeout: 10s (as test mode) 5min 10min 30min 60min.
   Set Dimming level: Off 10% 30% 50% .After people leave , light will off or dim to this level automatically.
   Set Sensitivity: 30% 45% 60% 80% 100%.
4. Hold SETUP for 3s to save setting , small led light on sensor flash twice indicate set up .

Note: Every time you change settings , DO remember to HOLD SETUP for 3s to save .

Flashing red lens indicates Low Battery / Customized default setting is available

Default Setting :
Timeout : 10min
Dimming : Off
Sensitivity : 100%

10588 Monte Vista Ave,
Montclair, CA 91763

atgelectronics.com
sales@atgelectronics.com
951.245.6222

Wireless Dual-tech PIR/Daylight Sensor

This model is IP66 , widely used for inside or outdoor situation , which can be installed on the surface of any outdoor light or on any subject where you want the sensor to detect people .

Model Number	Voltage	Standby Current	Battery Life	Frequency Band	RF Range	Mount Height
BCS401	3V	2uA	5-year	443.92Mhz	30m	Max 15m

Quick Setup :

1.Push PAIR on Power Pack dimming module , the small led on dimming module will flash quickly .

2.Hold PAIR on sensor until hear a beep indicate the sensor has linked with the dimming module .

3.Chose Mode 1: Occupancy mode

Chose Mode 2: Streetlight mode , light Automatically on after ambient light is lower than the LUX value you set .

Please refer to the below form to setup .

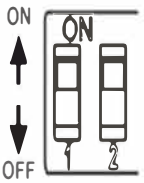

Sensitivity			Delay Time			Dimming Level			Dimming Time			Light sensor LUX		
1	2		3	4		5	6		7	8		9	10	
↓	↓	30%	↓	↓	10s	↓	↓	0%	↓	↓	Permanant on	↓	↓	light sensor off
↓	↑	50%	↓	↑	5min	↓	↑	10%	↓	↑	10min	↓	↑	10Lux
↑	↓	80%	↑	↓	10min	↑	↓	30%	↑	↓	30min	↑	↓	30Lux
↑	↑	100%	↑	↑	30min	↑	↑	50%	↑	↑	60min	↑	↑	50Lux

10588 Monte Vista Ave,
Montclair, CA 91763

atgelectronics.com
sales@atgelectronics.com
951.245.6222

Wireless daylight harvest sensor

Balance and dim the light in response to available daylight .

Surface mount about 2-3m away from the window facing the sunlight,far away form strong electrical lights.

Model Number	Voltage	Standby Current	Battery Life	Frequency Band	RF Range	Light Range
BDS401	3V	2uA	5-year	443.92Mhz	30m	0 to 1000 lux

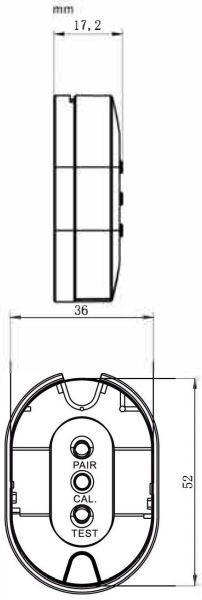

Quick Setup:

1. Push PAIR on Power Pack 0-10V dimming module,the small led on dimming module will flash quickly .
2. Push PAIR for 3s on Davlight Sensor.
   You will hear a beep indicate the sensor has linked with the dimming module.
3. Set lights in room to desired light level with manual controller.
4. Push CAL. to calibrate the daylight sensor .
   The sensor will collect the Current Light Level in room , and dim the light according to this level you calibrate . When you push CAL. , please do not point the transparent hole to strong light or very dark place , it may collect wrong light level . Find a place where is about 1-2m away from window with proper light level you want, point the daylight sensor (the transparent hole side , and don't cover the hole) to window with proper daylight , then push CAL., small green led flash .
5. Push TEST to enter into test mode, the white led light of the sensor will flash to indicate test mode .
   Cover the sensor to see if the lights in room dim up , shine the sensor to see if lights dim down . It takes about 10 seconds to dim , if the performance is not that good , repeat last step to CAL. another light level .
6. After calibration , hold TEST for 3s until two small leds (green and red) on sensor flash once to quit test mode .Important , or battery will power off very soon.
   After quitting test mode , the sensor will not react and dim lights quickly as test mode .
   Because sun light changes very slowly , so the sensor is designed to react half an hour , so as to guarantee the battery life .

10588 Monte Vista Ave,
Montclair, CA 91763

atgelectronics.com
sales@atgelectronics.com
951.245.6222